B2S
BETTER SOLUTION & SUPPORT

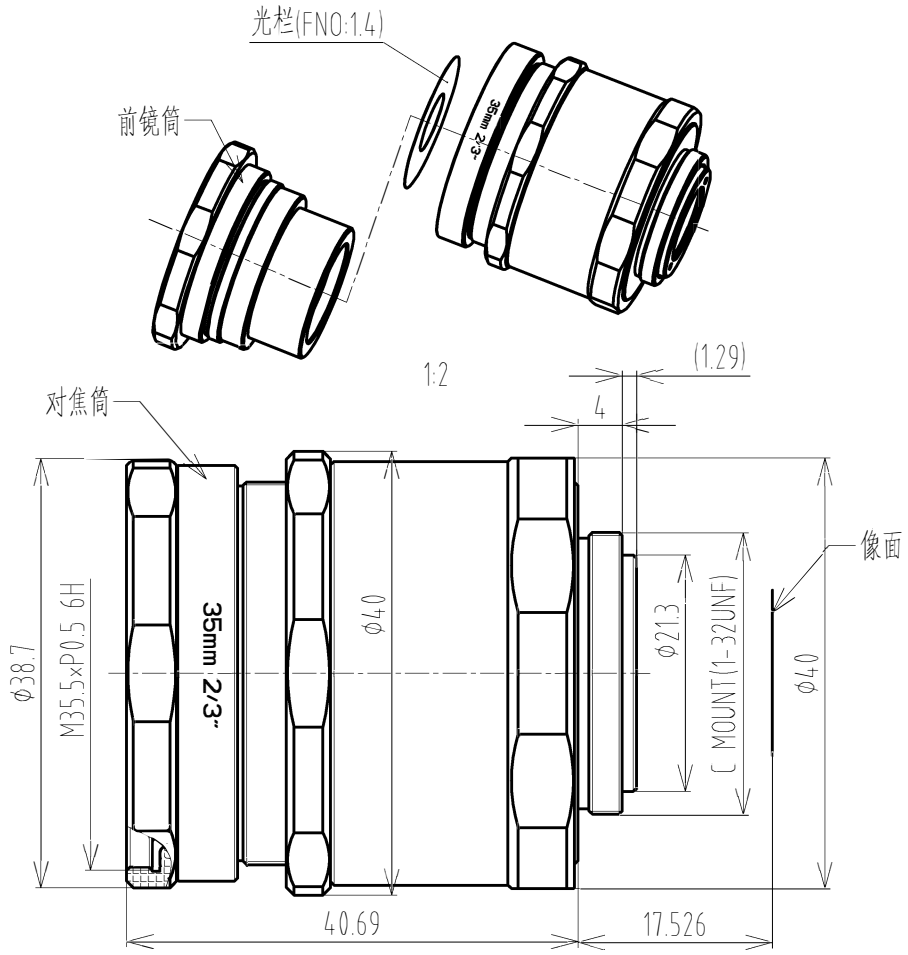

2/3" F1.4/35 C Mount				Working distance	Optical Magnification	2/3" Field of View(mm)	
Focal Length		f=35mm					
Max Diameter (Ratio)		F=1:1.4		mm		H	V
Picture Size		2/3"	1/2"	900	0.037	236.2	176.9
Angle	H	13.9°	10.1°	850	0.040	223.2	167.2
	V	10.4°	7.6°	800	0.042	210.3	157.5
	D	17.3°	12.6°	750	0.045	197.3	147.8
Distortion (TV)		-0.8%	-0.4%	700	0.048	184.3	138.1
Object Dimension at M.O.D(2/3")	H	81mm		650	0.052	171.4	128.4
	V	60mm		600	0.056	158.4	118.6
	D	100mm		550	0.061	145.5	108.9
Focus distance(min)		0.15m		500	0.067	132.5	99.2
Flange back		17.526mm in air		450	0.074	119.6	89.5
Back focus		8.7MM		400	0.083	106.6	79.8
Filter screw size		M35.5x0.5		350	0.094	93.7	70.1
Front/Rear Effective Dia		Φ24.8/Φ13.6		300	0.110	80.7	60.4
Mount		C-Mount		250	0.131	67.7	50.6
Temperature Range		-10~+50°C		200	0.162	54.7	40.9
Storage Temperature Range		-20~+60°C		150	0.213	41.8	31.2

TOLERANCE:
. LINEARITY TOLERANCES ±0.05
. ANGULAR TOLERANCES ARE±30'
. DRAFT ANGLES AREA±0.5°/SIDE

三角法

材料(环保)	单位	比例
---	mm	1.5:1

标记	处数	更改文件号	担当	变更日期					
					设计			名称	FK3502A 镜头规格
△3			LZJ	2022-01-21	校对				页码 1/1
--	--	------	JXL	2021-01-25	审核			代号	FK3502A-SPEC
					批准				版本 V03

A4

CHIOPT