B2S
BETTER SOLUTION & SUPPORT

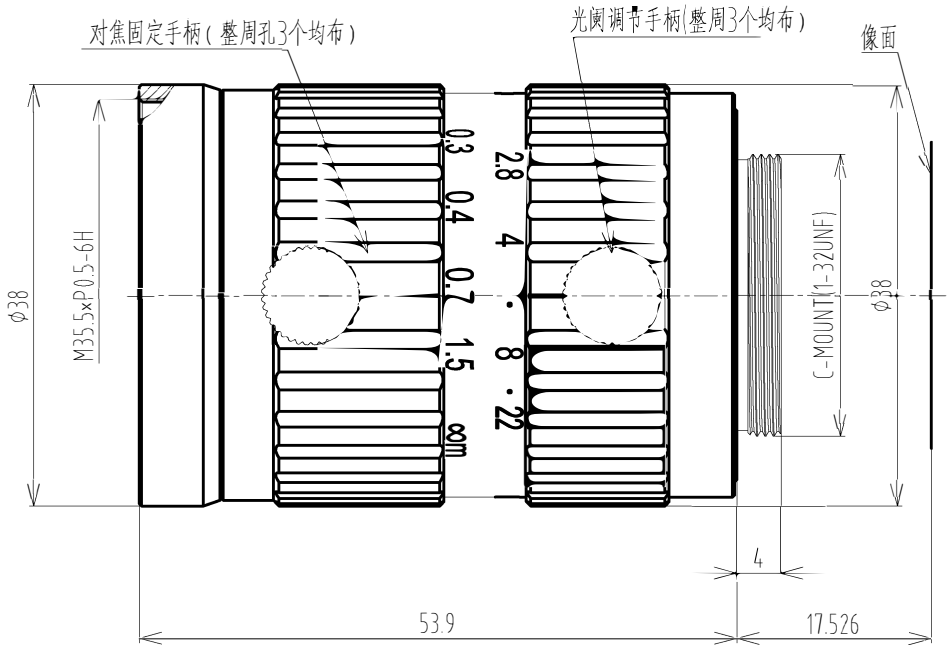

4/3" F2.8/50 C Mount					Working distance	Optical Magnification	4/3" Field of View(mm)	
Focal Length		f=50mm			mm		H	V
Max Diameter (Ratio)		F=1:2.8~22						
Picture Size		4/3"(17.6×13.2mm)	1"(12.8×9.6mm)	2/3"(8.8×6.6mm)				
Angle	H	19.8°	14.6°	10.1°	5000	0.01X	1721.3	1292.5
	V	14.9°	10.9°	7.5°	2000	0.026X	682.9	512.7
	D	24.8°	18.2°	12.6°	1000	0.052X	341.4	256.2
Object Dimension at 300mm	H	98.6mm	71.6mm	49.3mm	900	0.057X	306.6	230.1
	V	74mm	53.8mm	37mm	800	0.065X	272.5	204.5
	D	123.4mm	89.7mm	61.6mm	750	0.069X	255.2	191.5
Distortion (TV)		<0.1%	<0.04%	<0.02%	700	0.074X	237.9	178.5
Focus distance(min)		0.3m			650	0.08X	220.5	165.4
Flange back		17.526mm in air			600	0.087X	203.2	152.4
Back focus		21.1mm(min)			550	0.095X	185.8	139.4
Filter screw size		M35.5xP0.5			500	0.105X	168.4	123.6
Front/Rear Effective Dia		Front Φ24mm Rear Φ21.7mm			450	0.117X	151	113.2
Mount		C-Mount			400	0.132X	133.5	100.1
Temperature Range		-10~+50°C			350	0.152X	116	87
Storage Temperature Range		-20~+60°C			300	0.179X	98.6	73.9

TOLERANCE:
. LINEARITY TOLERANCES ±0.05
. ANGULAR TOLERANCES ARE±30'
. DRAFT ANGLES AREA±0.5°/SIDE

三角法

材 料(环 保)

单位	比例
mm	1:1

设计		名称	FA5020A 规格	页码
校对		部番	FA5020A SPEC	1/1
审核				版本
批准		商品代号		V0

版本	处数	更改文件号	担当	变更日期

A4

CHIOPT