B2S
BETTER SOLUTION & SUPPORT

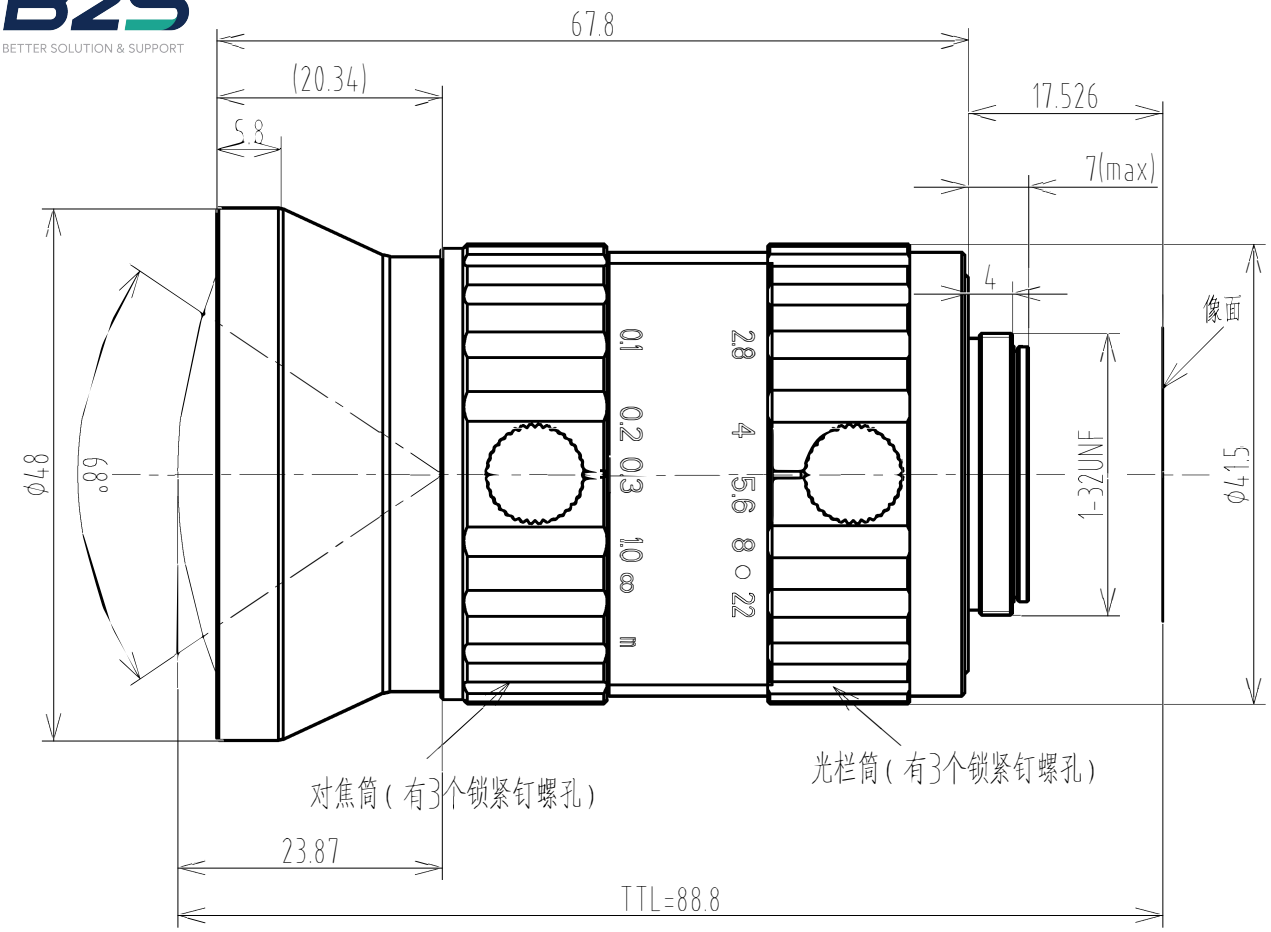

1.1" F2.8/12 C Mount					Working distance	Optical Magnification	1.1" Field of View(mm)	
Focal Length		f=12mm			mm		H	V
Max Diameter (Ratio)		F=1:2.8~22			5000	0.002X	7050	5300
Picture Size		1.1"(14.1×10.6mm)	1"(12.8×9.6mm)	2/3"(8.8×6.6mm)	2000	0.006X	2350	1766.7
Angle	H	57°	54.8°	38.9°	1000	0.012X	1175	883.3
	V	45°	42.3°	29.6°	900	0.013X	1084.6	815.4
	D	66.7°	66.1°	47.9°	800	0.015X	940	706.7
Object Dimension at 200mm	H	251.8mm	228.6mm	157.1mm	700	0.017X	829.4	623.5
	V	189.3mm	△3 171.4mm	117.9mm	600	0.02X	705	530
	D	314.3mm	285.7mm	196.4mm	550	0.022X	640.9	481.8
Distortion (TV)		<1.5%	<1.5%	<1%	500	0.024X	587.5	441.7
Focus distance(min)		0.1m			450	0.026X	542.3	407.7
Flange back		17.526mm in air			400	0.029X	486.2	365.5
Back focus		10.6mm(min)			350	△3 0.033X	427.3	321.2
Filter screw size		无			300	0.038X	371	278.9
Front/Rear Effective Dia		Front φ42.9mm Rear φ20.5mm			250	0.045X	313.3	235.6
Mount		C-Mount			200	0.056X	251.8	189.3
Temperature Range		-10~+50°C			150	0.072X	195.8	147.2
Storage Temperature Range		-20~+60°C			100	0.103X	136.9	102.9

TOLERANCE:
. LINEARITY TOLERANCES ±0.05
. ANGULAR TOLERANCES ARE±30'
. DRAFT ANGLES AREA±0.5°/SIDE

三角法

材 料(环 保)

单位	比例
mm	1.5:1

版本	处数	更改文件号	担当	变更日期	
△3	2	---	CHP	2021.08.16	设 计
△2	6	---	CHP	2021.07.21	校 对
△1					审 核
					批 准

名称	技术规格书	页码	
部番	FA1216A SPEC	1/1	
商品代号		版本	V3

CHIOPT