B2S
BETTER SOLUTION & SUPPORT

STL-CH1214

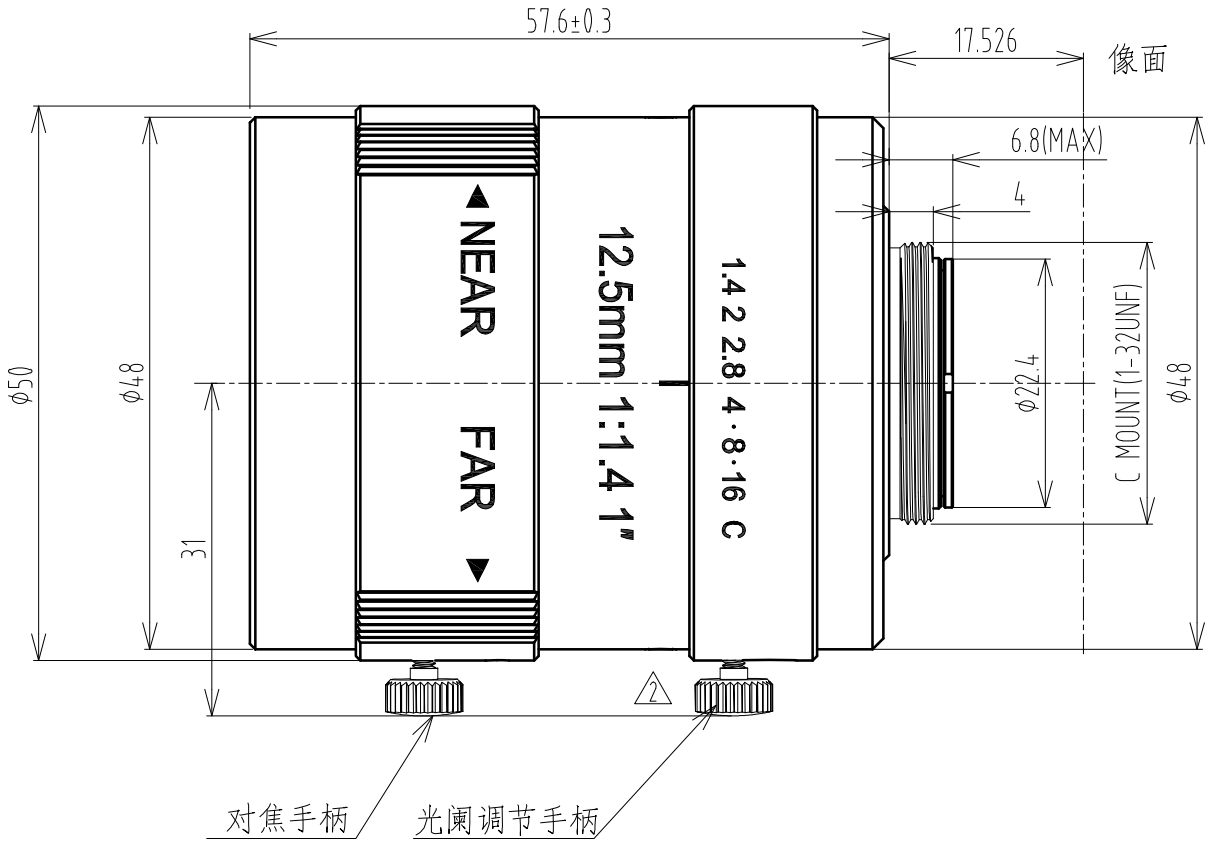

1" F1.4/12.5 C Mount					Working distance	Optical Magnification	1" Field of View(mm)	
Focal Length		f=12.5mm			mm		H	V
Max Diameter (Ratio)		F=1:1.4~16			900	-0.0136	941.17	705.88
Picture Size		1"	2/3"	1/2"	850	-0.0144	888.89	666.66
Angle	H	54.5°	38.5°	28.8°	800	-0.0153	836.6	627.45
	V	42°	29.1°	21.7°	750	-0.0162	790.12	592.6
	D	66.3°	47.5°	35.7°	700	-0.0174	735.63	551.7
Object Dimension at M.O.D	H	126.4mm	84.9mm	62.3mm	650	-0.0187	684.5	513.37
	V	93mm	63mm	46.4mm	600	-0.02	640	480
	D	161.5mm	107.4mm	80mm	550	-0.022	581.8	436.36
Distortion (TV)		1.8%	1%	0.4%	500	-0.024	533.33	400
Focus distance(min)		0.1M			450	-0.0267	479.4	359.55
Flange back		17.526mm in air			400	-0.03	426.66	320
Back focus		15.7			350	-0.034	376.47	282.35
Filter screw size		M46×0.75			300	-0.0393	325.7	244.27
Front/Rear Effective Dia		Φ35/Φ18.8			250	-0.0467	274.09	205.56
Mount		C-Mount			200	-0.0574	223	167.24
Temperature Range		-10~+50°C			150	-0.075	170.67	128
Storage Temperature Range		-20~+60°C			100	-0.0106	126.4	93

TOLERANCE:
. LINEARITY TOLERANCES ±0.05
. ANGULAR TOLERANCES ARE±30'
. DRAFT ANGLES AREA±0.5°/SIDE

三角法

材料(环保)	单位	比例
---	mm	1.5:1

标记	处数	更改文件号	担当	变更日期					
					设计	CHP	2014-03-06	名称	HC1205A 镜头
2	1	---	CHP	2017.11.29	校对				页码 1/1
1	1	---	CHP	2017.09.11	审核			代号	HC1205A-SPEC
					批准				版本 V2

A4

CHIOPT