Allied Vision

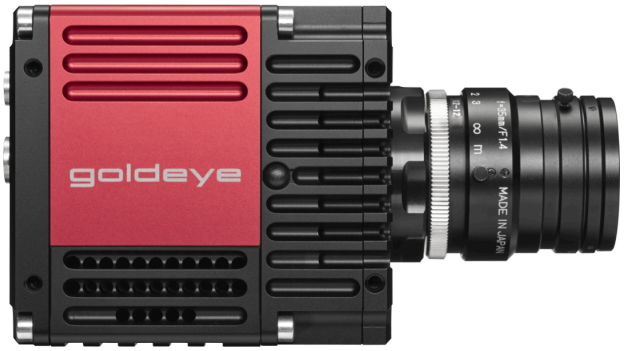

Goldeye CL

Goldeye CL-008 SWIR Cool TEC1

The Goldeye CL-008 Cool TEC1 is one of the fastest QVGA resolution SWIR cameras with Camera Link interface. With frame rates up to 344 fps at full resolution, versatile application fields can be addressed and processes can be sped up strongly. To enable low-noise imaging in the spectral range from 900 nm to

General

Model	Goldeye CL-008 SWIR Cool TEC1
Product series	Goldeye CL
Status	Available

Sensor

Sensor type	Area scan
Chroma	Mono
Spectrum	SWIR
Spectral range	900 nm to 1700 nm
Resolution	320 × 256 (0.10 MP)
Sensor model	FPA 320 × 256 | 30 µm | InGaAs
Sensor architecture (material)	cmos-ingaas
Sensor size	9.6 × 7.68 mm (12.29 mm, 12.29 mm (diagonal))
Pixel size	30.00 µm × 30.00 µm

Pixel formats

Sensor bit depth	14-bit
Monochrome pixel formats	Tap geometry 1X 1Y: Mono8, Tap geometry 1X2 1Y: Mono8

Timing and gain

Max. frame rate	344 fps
Exposure time	6 µs to 1 s
Gain	0.0 dB to 24.0 dB

I/Os and power

Non-isolated lines	LVTTL I/Os: 1 input, 1 output
Specific non-isolated lines	115 200 Baud, 8N1 (adjustable)
Opto-isolated lines	1 input, 2 outputs
Power supply	10.8 V to 30.0 V
Power consumption	10.5 W (at 12 VDC)

Operating conditions

Operating temperature (housing)	-20 °C to 55 °C ((housing))

Mechanical properties

Body dimensions (L x W x H in mm)	90 × 80 × 80
Weight	760 g

On-board memory and FPGA

Image buffer (RAM)	256 MByte

Interfaces

Digital interface	Camera Link Base

Quantum Efficiency

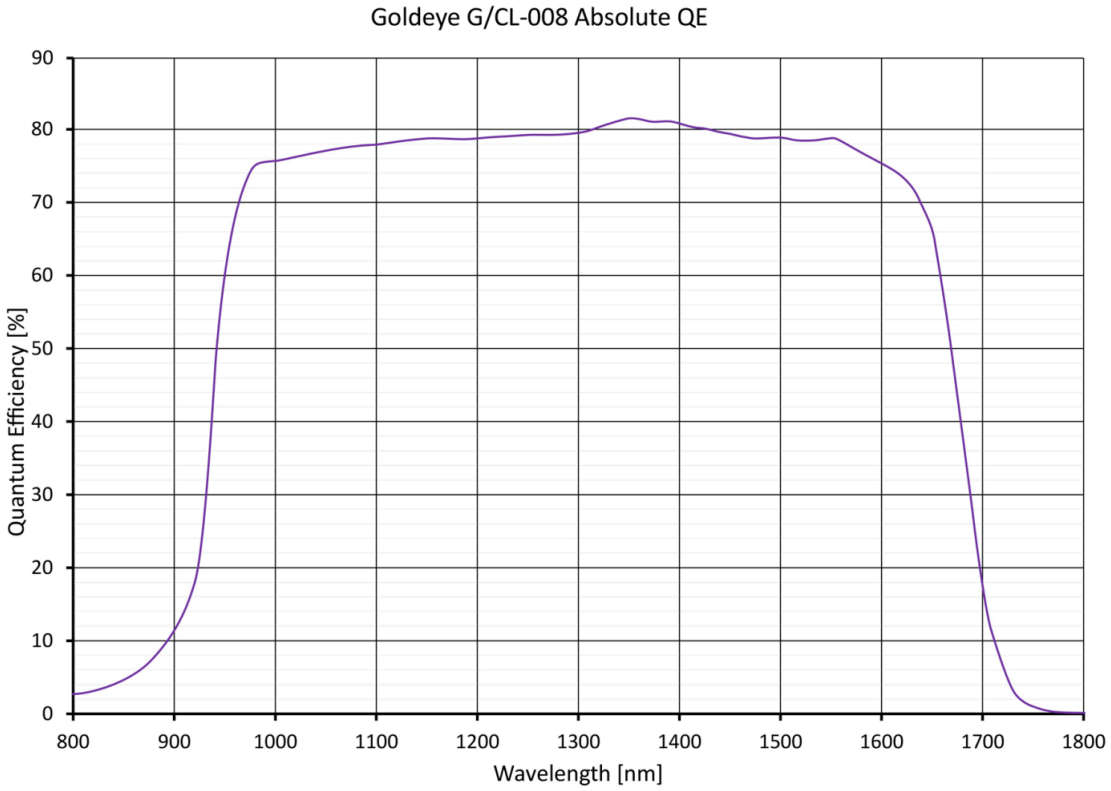
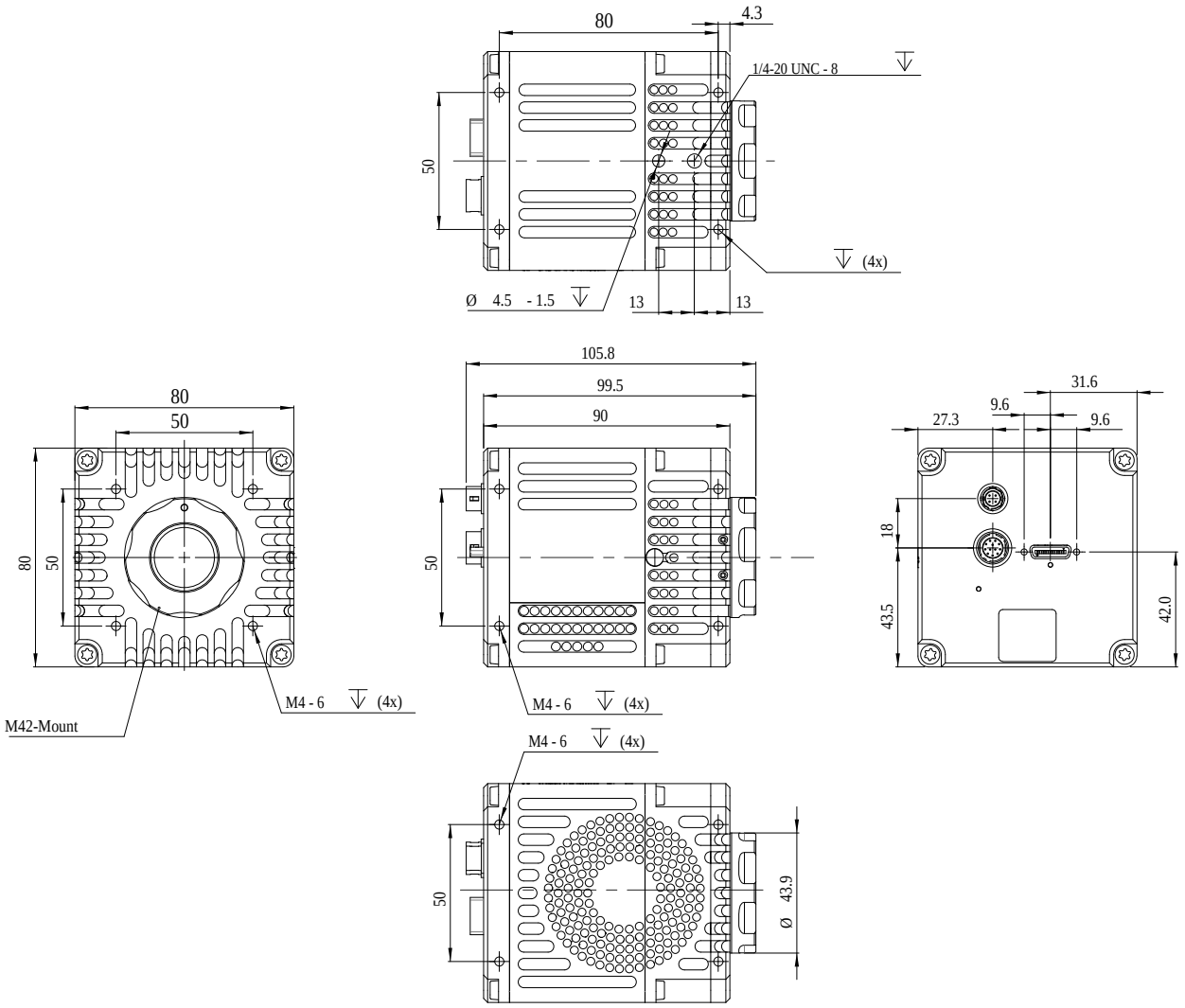
Technical Drawing