Allied Vision

Goldeye G

Goldeye G-034 SWIR TEC1

The Goldeye G-034 TEC1 high-speed camera is the fastest VGA resolution short wave infrared camera (SWIR) with GigE Vision interface. Frame rates up to 303 fps at full resolution enable you to access versatile application fields and to speed up your processes.

General

Model	Goldeye G-034 SWIR TEC1
Product series	Goldeye G
Status	Available

Sensor

Sensor type	Area scan
Chroma	Mono
Spectrum	SWIR
Spectral range	900 nm to 1700 nm
Resolution	636 × 508 (0.30 MP)
Sensor model	FPA 636 × 508 | 15 µm | InGaAs
Sensor architecture (material)	cmos-ingaas
Sensor size	9.54 × 7.62 mm (12.21 mm, 12.21 mm (diagonal))
Pixel size	15.00 µm × 15.00 µm

Pixel formats

Sensor bit depth	14-bit

Timing and gain

Max. frame rate	303 fps
Exposure time	1 µs to 200.00 ms
Gain	0.0 dB to 33.0 dB

I/Os and power

Non-isolated lines	LVTTL I/Os: 1 input, 1 output
Specific non-isolated lines	115 200 Baud, 8N1 (adjustable)

I/Os and power

Opto-isolated lines	1 Input, 2 Outputs
Power supply	10.8 V DC to 30.0 V or via PoE
Power consumption	10.8 W (at 12 VDC), <12.95 W (PoE)

Operating conditions

Operating temperature (housing)	-20 °C to 55 °C ((housing))

Mechanical properties

Body dimensions (L x W x H in mm)	78 × 55 × 55
Weight	370 g

On-board memory and FPGA

Image buffer (RAM)	256 MByte
Non-volatile memory (Flash)	262 MByte

Interfaces

Digital interface	IEEE 802.3 1000BASE-T, IEEE 802.3af (PoE)

Quantum Efficiency

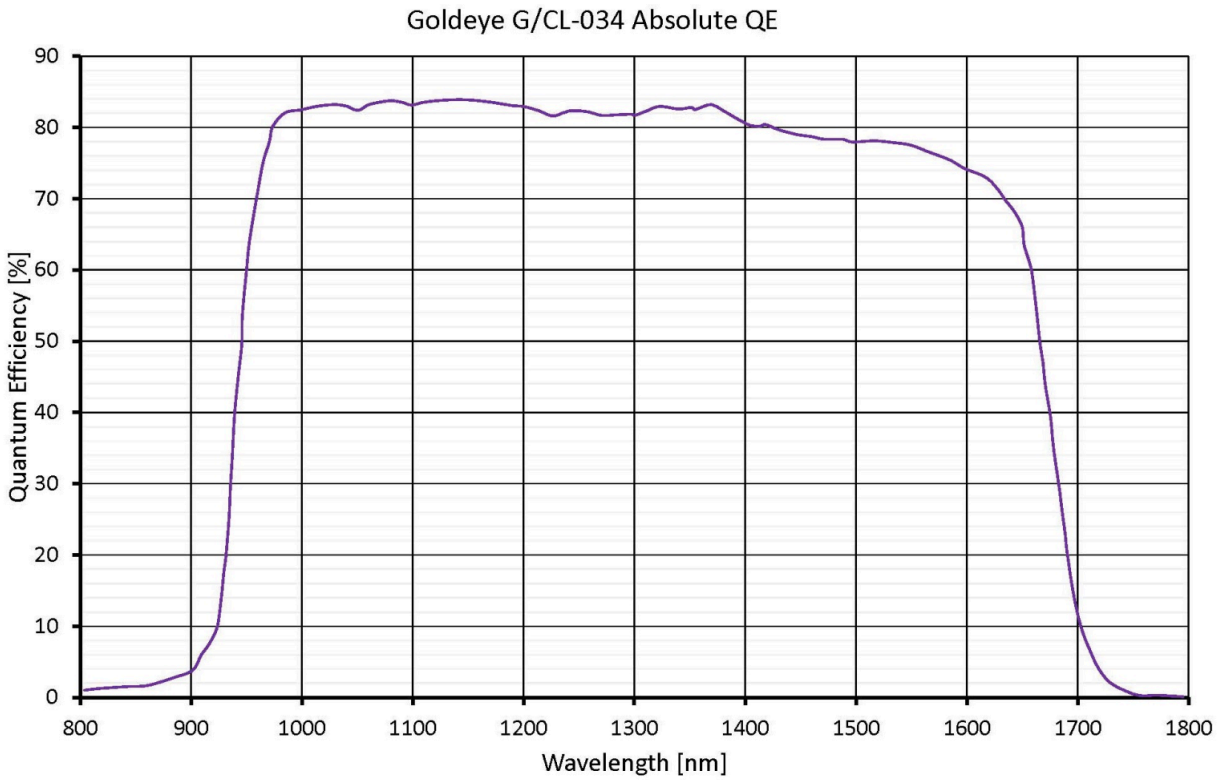
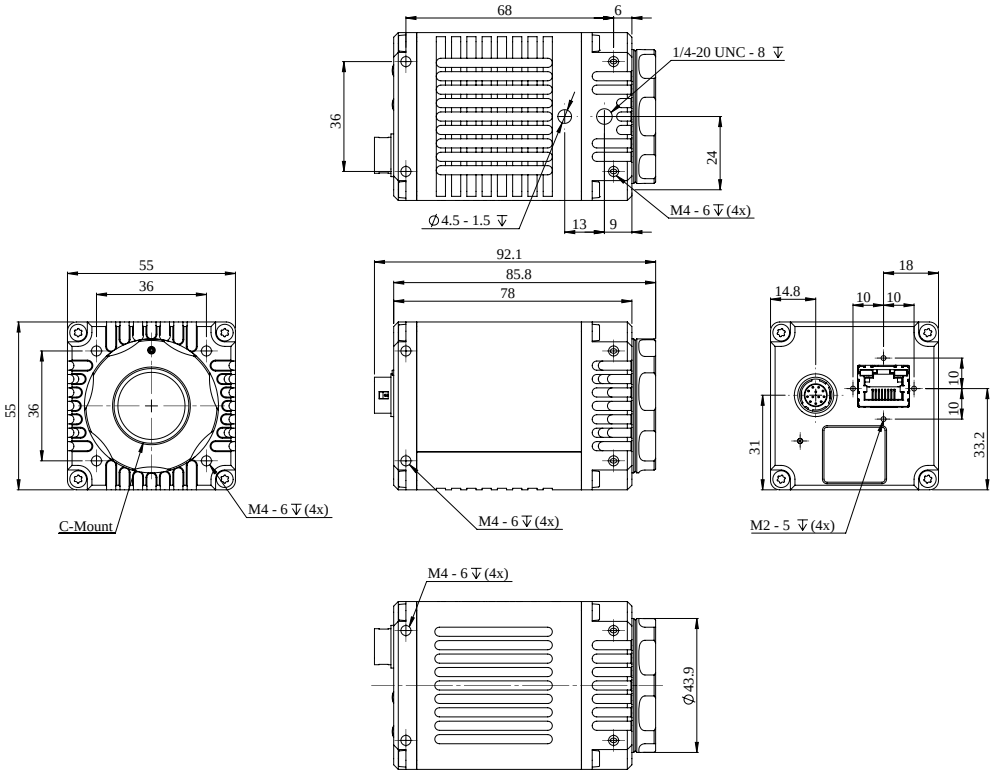
Technical Drawing