VEO_CS DIAMOND 3.33× / F2.3

For TDI Line Scan

Key Features

- Optimized for 62.5 ㎜ line scan sensors
- High resolution over the entire field
- Resolves 2.1 ㎛ in object space
- With beam splitter for axial in-line illumination
- Low chromatic focal shift
- No relative illumination loss at the edge
- Best azimuth marking



Applications

- FPD (OLED / LCD) inspection
- PCB inspection
- High resolution defect detection
- Quality assurance systems

Performance

Parameter	Specification	Remarks
Magnification range	3.33 (3.2 ... 3.4)	
F/# range	F/2.3 ... F/4.0	Optimum F/2.3
Numerical aperture	0.157	
Max. sensor size [㎜]	62.5	
Infinite F/#	F/2.3	
Focal length [㎜]	116	
Depth of field [㎛]	18.4	@ P. CoC 10um
Distortion	< 0.05%	
Wavelength [㎚]	400 ... 1000	Visible ... NIR
Working distance [㎜]	55.5(56.5...54.5)	B/S ... Object
Beam splitter size	25 × 25 × 80	
Total length [㎜]	653.8± 2	from Object to Sensor
Interface	V70 mount	0.75 pitch
Iris	Changeable	
Relative illumination	Less than 5%	
Weight [g]	2260	

Optical Parameters

Contents	Parameter	Value
Chief Ray Angle (Max.) in object plane	CRA	3.5°
Effective focal length	f'eff [㎜]	116.14
Front focal length	SF [㎜]	-21.64
Back focal length	S'F' [㎜]	33.40
Principal plane distance	HH' [㎜]	-0.42
Pupil magnification	β'P	0.97
Entrance pupil position	SEP [㎜]	98.21
Exit pupil position	S'AP [㎜]	-79.13
Vertex width	Σd [㎜]	176.80

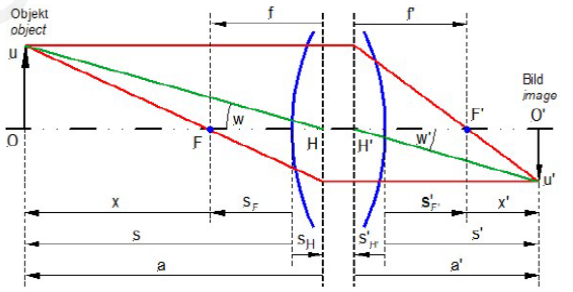

VEO_CS DIAMOND 3.33× / F2.3

For TDI Line Scan

MTF

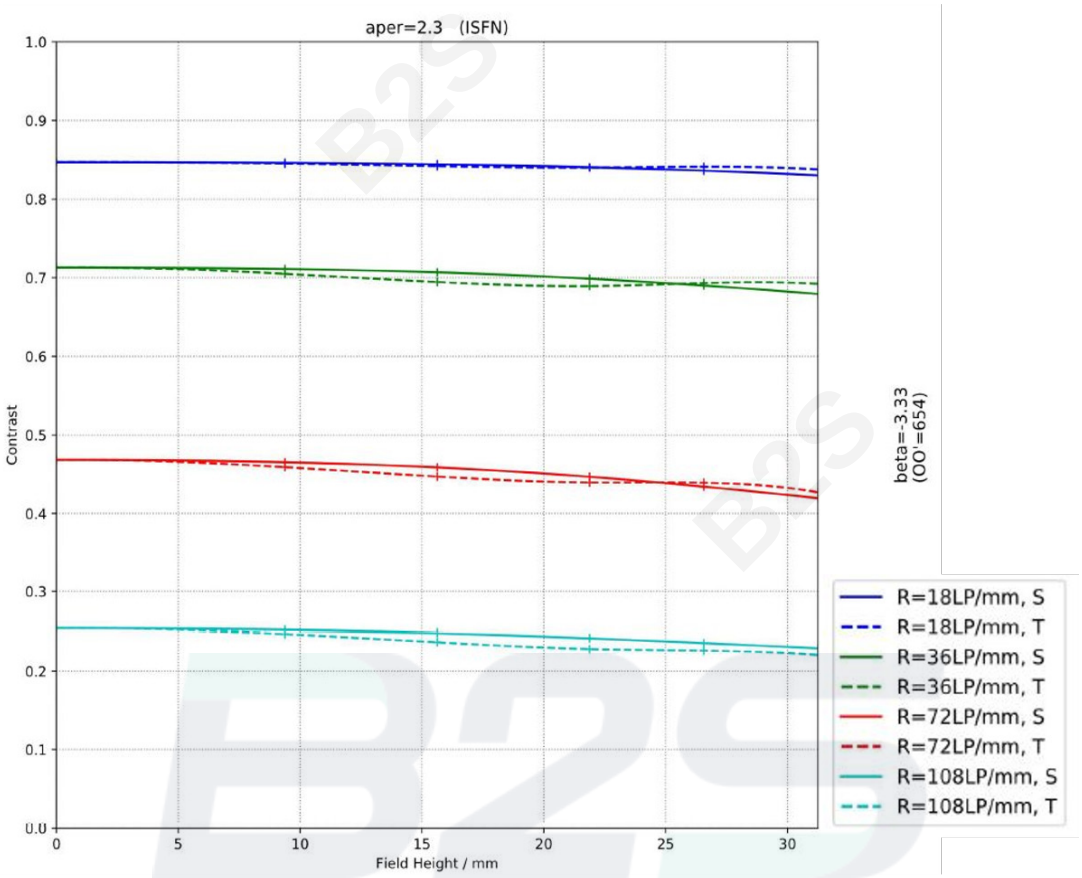

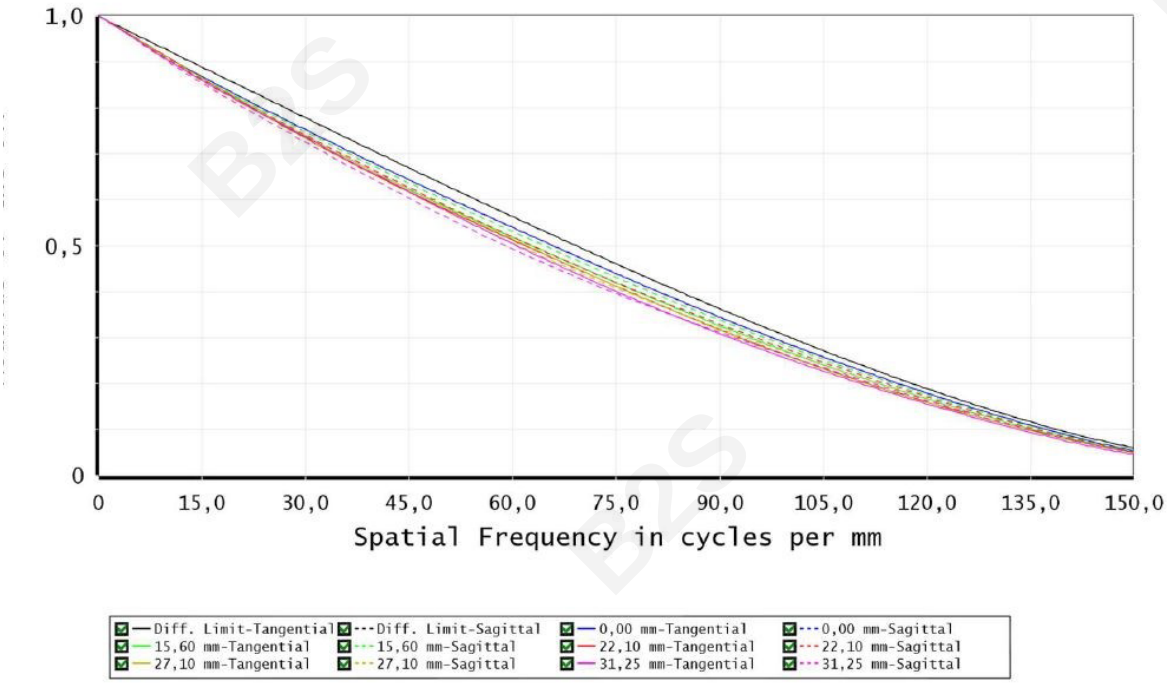

Polychromatic Diffraction MTF
Data for 0.4360 to 0.6450 µm
Surface: Image (image level)
Legend items refer to Field positions

Relative Illumination

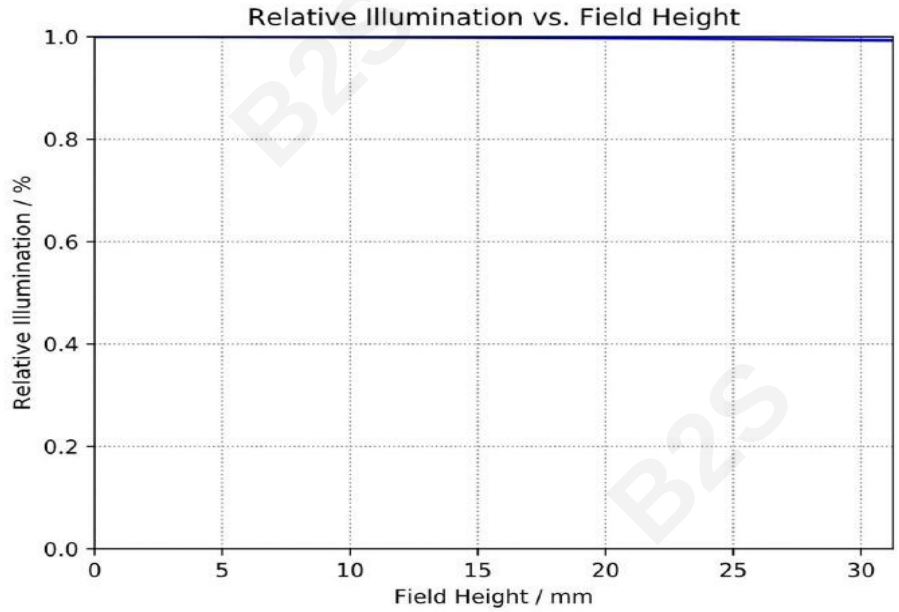

Distortion

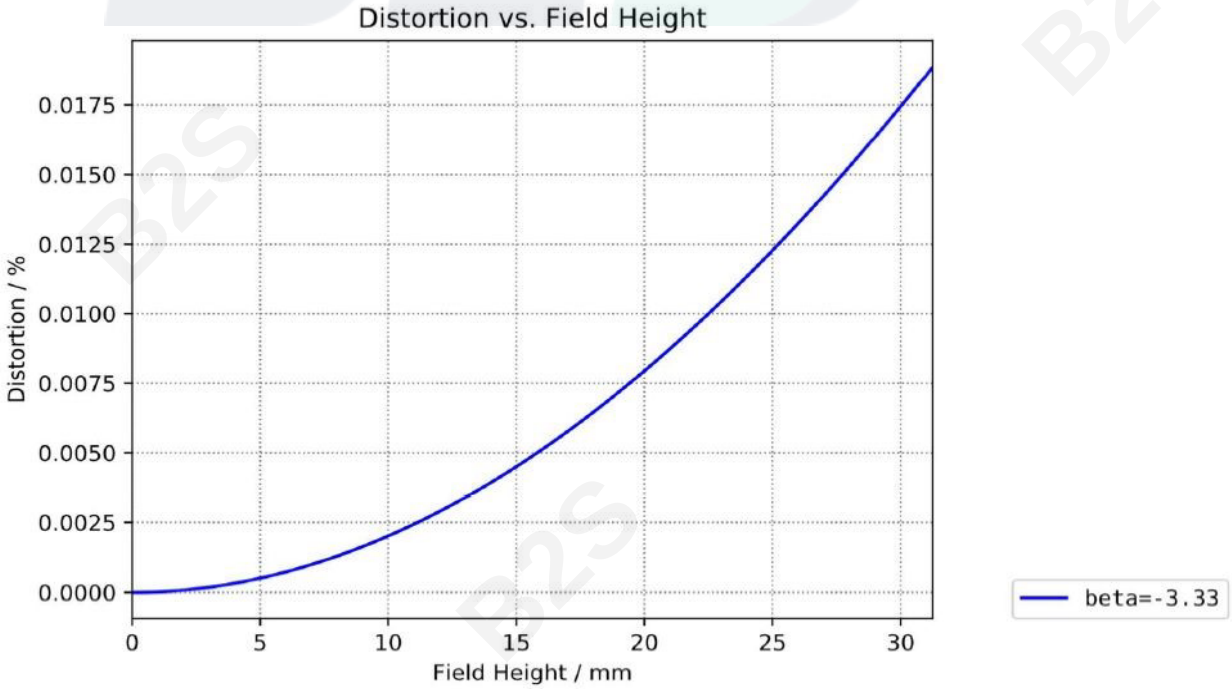

VEO_CS DIAMOND 3.33× / F2.3

For TDI Line Scan

Dimensions

Unit: mm

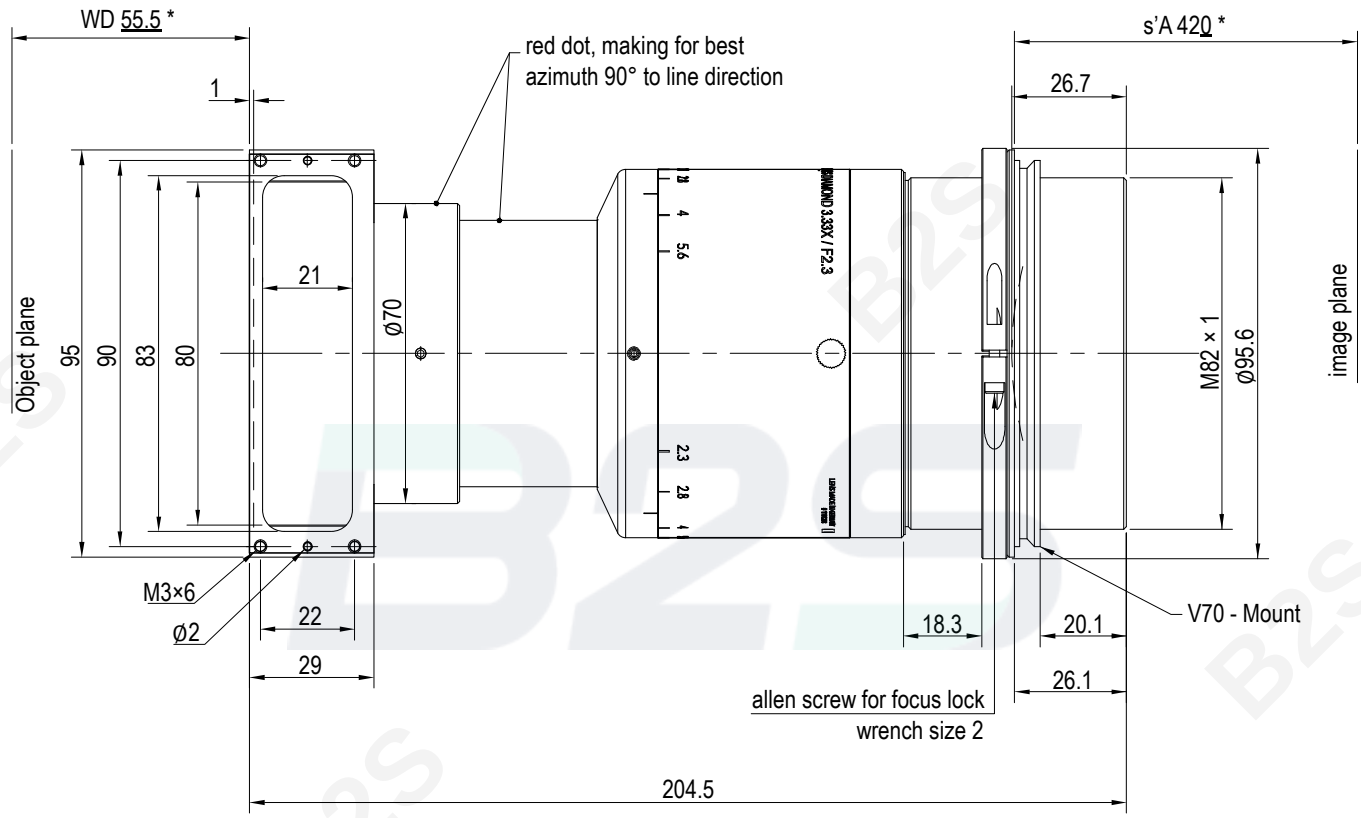

41-3, Burim-ro 170 beon-gil, Dongan-gu, Anyang-si, Gyeonggi-do, 14055 Republic of Korea
Tel +82-70-7011-6161 **Fax** +82-31-386-8631 **E-mail** vision@vieworks.com **Web** vision.vieworks.com

Copyright © 2022 Vieworks Co., Ltd. All rights reserved.