DUAL-HEAD 3D SENSORS
ACCURATE, SHADOW-FREE SCANNING

DUAL-HEAD

ECCO 95+

3D INSPECTION SENSOR

SHADOW-FREE 3D SCANNING
TWO-CAMERA 3D SCANNING FOR OPTIMUM TARGET VISIBILITY

ULTRA-HIGH RESOLUTION
THE CAPABILITY TO INSPECT EXTREMELY FINE FEATURES

SUPERIOR IMAGE QUALITY
THE BEST REPEATABILITY UNDER CHALLENGING CONDITIONS

SmartRay B2S BETTER SOLUTION & SUPPORT Certainty in metrology

KEY SPECIFICATIONS

Model	**Dual-Head ECCO 95.010+**	**Dual-Head ECCO 95.040+**	**Dual-Head ECCO 95.200+**
Field of view (near | mid | far)	10.5 | **11** | 11.5 mm	34 | **36** | 38 mm	125 | **190** | 280 mm
Typical measurement range	4 mm	16 mm	300 mm (-125 mm, +175 mm)
Stand-off distance	25 mm	55 mm	320 mm
Typical vertical resolution	0.37-0.45 µm	1.4-1.8 µm	12-50 µm
Typical lateral resolution	5.8-6.8 µm	18-20 µm	66-138 µm
Z-linearity	0.015%	0.006%	0.015%
Z-repeatability	0.1 µm	0.4 µm	3.3 µm
Mounting distance	45.5 mm	75.5 mm	345.5 mm
Laser wavelength	450 nm (brilliant blue laser)		660 nm (red laser)
laser class 2	3.001.602	3.001.603	3.005.604
laser class 3R	3.004.602	3.004.603	3.008.604
Laser class (standard | optional)	2 | 3R		
Maximum points / 3D profile	3840		
Weight	1350g		
Typical scan rate 1	Approx. from 1 kHz up to 10 kHz		
Typical 3D point rate 1	Approx. from 0.7 up to 15 million points/sec		
Interface	Gigabit Ethernet (1 Gbit/sec)		
Inputs	2x Inputs (5 – 24 VDC) Quadrature Encoder (AB-Channel, RS-422 standard)		
Outputs	2 x Outputs, 24 VDC (max. 20 mA)		
Trigger	The following triggers are supported: START Trigger support on Input 1 – 2 DATA Trigger support on Quadrature Encoder Input (Max. DATA trigger rate: 1 MHz) DATA Trigger support on Input 2 (Max. DATA trigger rate: 10 kHz)		
Input voltage | power	24 VDC ± 15% 17W		
Maximum ambient light	10,000 lx		
EMC test	as per EN 61 000-6-2, EN 61 000-6-4, EN 61326-1:2013-07		
Electrical safety	as per EN 61 010-1-3		
Protection class	III, as per EN 61 040-3		
Laser safety inputs	24 VDC | 0V		
Enclosure rating	IP65		
Air humidity	Maximum 90%, non-condensing		
Temperature operation | storage	0 - 40˚C | -20 - 70˚C		
Compatible accessories	Power-I/O-Encoder cable: 6.320.0XX Ethernet cable: 6.445.003 - Y Cable		

Note: Typical values may vary up to ±5% due to optical and production tolerances

1 Scan rate & point rate are dependent on the configured field of view, measurement range and exposure time. A ‚scan' by definition considers maximum points/3D profile i.e. full FOV. The typical scan/point rate range has been estimated considering an exposure time of 1 µsec, min-max MR and full FOV. The typical scan rate can be further boosted by windowing the FOV

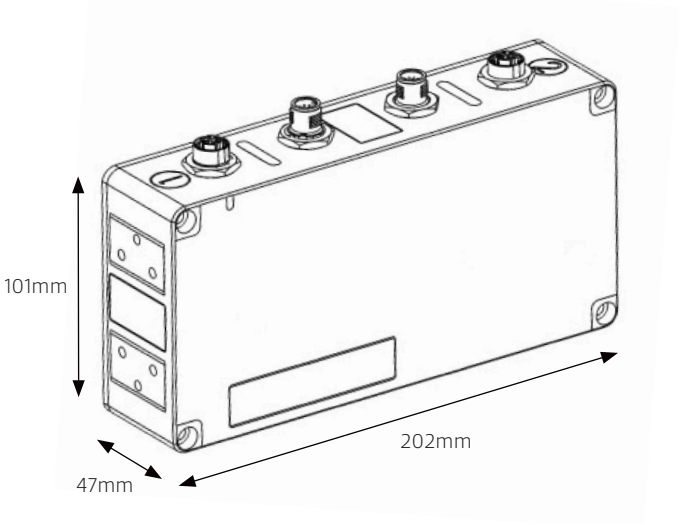

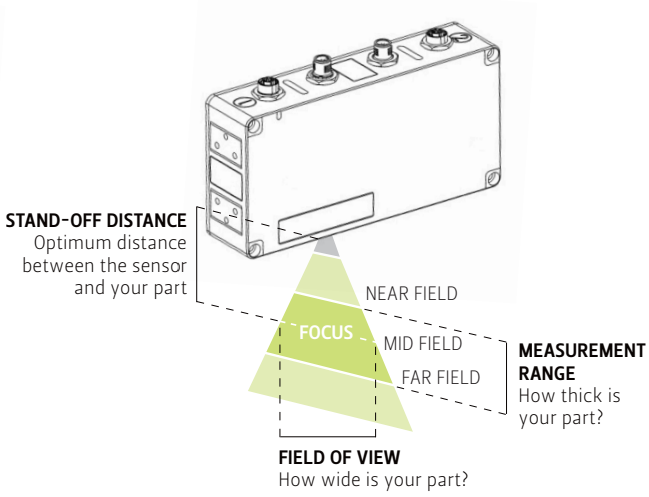

최적의 ALL-IN-1 솔루션을 제안합니다.

솔루션, 제품, 서비스에 대해 궁금하신 내용을 남겨주시면 빠른 시일 내로 회신 드리겠습니다.

B2S
BETTER SOLUTION & SUPPORT

제품·기술지원 문의

02-6914-6363
b2s@b2s.kr