VP-127MX2-M/C21H

127-Megapixel Thermoelectric Peltier Cooled Camera with CoaXPress 2.0 Interface

The VP-127MX2-M/C21H, the latest model of the industrial proven VP series, is a new 127-Megapixel CoaXPress camera and adopts the cutting-edge High Speed CMOS Image Sensor. The VP-127MX2-M/C21H camera offers up to 21.9 frames per second at 13,376 × 9,528 resolution. This camera uses thermoelectric Peltier (TEC) cooling technology developed for and used by many demanding medical market customers. The TEC maintains the operating temperature of the image sensor at up to 15 degrees below ambient temperature. The VP-127MX2-M/C21H camera provides a stable operating condition and the ability to expose for a long period of time to increase camera sensitivity. Featuring the stable operating capability and high resolution, this camera is ideal for demanding applications such as FPD, PCB and semiconductor inspections.

Mechanical Dimensions

Unit: mm

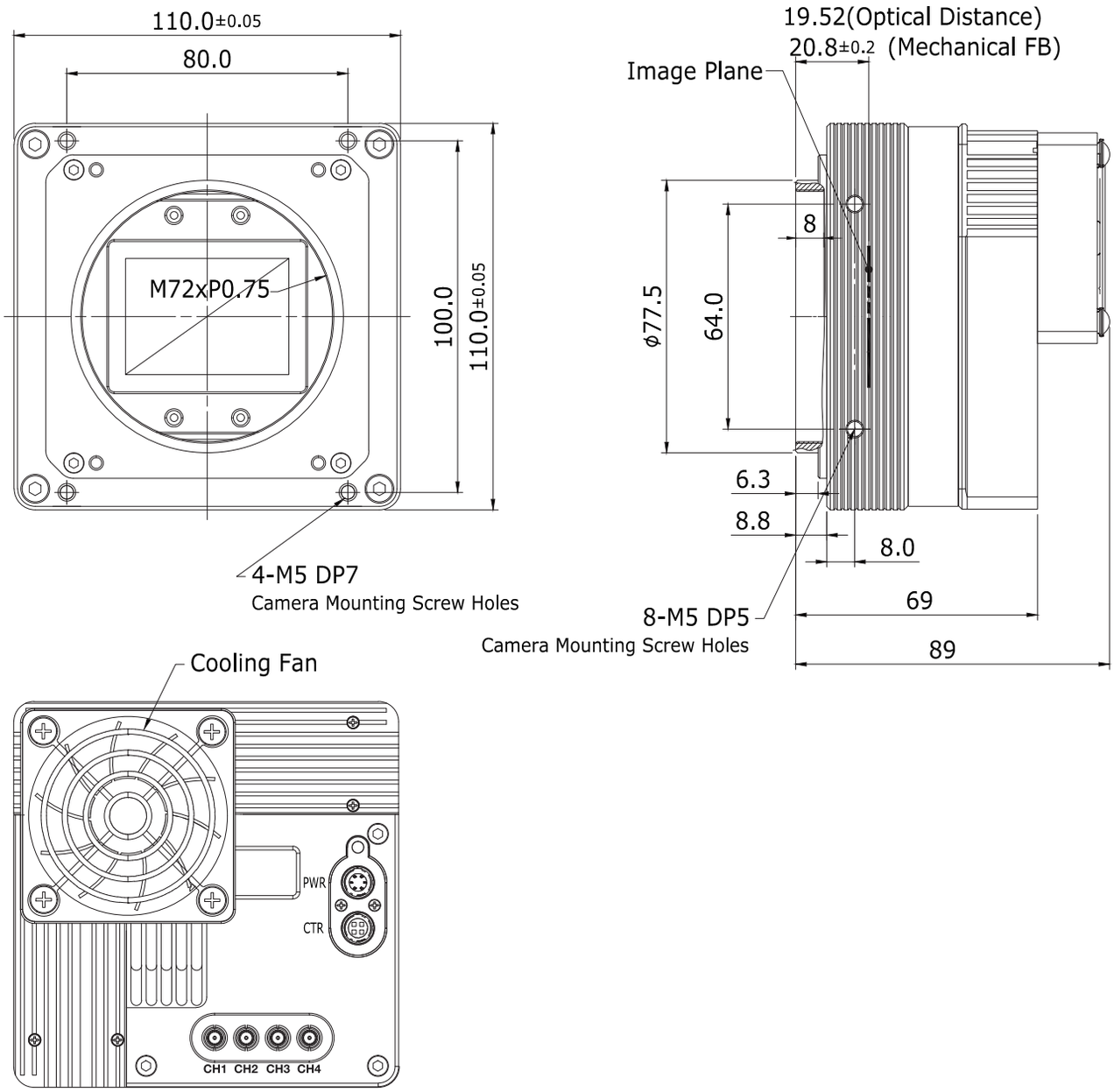

최적의 ALL-IN-1 솔루션을 제안합니다.

솔루션, 제품, 서비스에 대해 궁금하신 내용을 남겨주시면 빠른 시일 내로 회신 드리겠습니다.

공식 홈페이지 공식 블로그 공식 인스타그램

제품·기술지원 문의
02-6914-6363
b2s@b2s.kr

VP-127MX2-M/C21H

Ultra High Resolution CMOS Digital Camera

Main Features

- Thermoelectric Peltier Cooled – 15℃ below
- 127-Megapixel Resolution
- CoaXPress 2.0 Interface up to 21.9 fps at 50 Gbps using 4 Channels
- Global Shutter CMOS Technology
- PRNU Correction
- Flat Field Correction with Sequencer Control
- Defective Pixel Correction

Applications

- Flat Panel Display Inspection
- Electronics Inspection
- Semiconductor Inspection
- Document / Film Scanning

Specifications

Model		VP-127MX2-M/C21H
Resolution (H × V)		13376 × 9528
Sensor		SONY IMX661
Sensor Size (Diagonal)		46.15 ㎜ × 32.87 ㎜ (56.73 ㎜)
Pixel Size		3.45 ㎛ × 3.45 ㎛
Interface		CoaXPress 2.0 (CXP-6/10/12)
Max. Frame Rate (8 bit)	CXP6 × 4	19.2 fps
	CXP10 × 4	21.9 fps
	CXP12 × 4	21.9 fps
Exposure Time (1 ㎲ step)		1 ㎲ – 60 s
Binning	Sensor (12, 14 bit)	Horizontal and Vertical Dependent: ×1, ×2
	Logic	Horizontal and Vertical Independent: ×1, ×2, and ×4(Mono Only)
Pixel Data Format	Monochrome	8/10/12/14 bit
	Color	RG Bayer 8/10/12/14 bit
Electronic Shutter		Global Shutter
Exposure Mode		Timed, Trigger Width
Dynamic Range		73 ㏈ at 14 bit
Gain Control	Analog	1× ~ 12×
	Digital	1× ~ 32×
Black Level Control		0 ~ 1023 LSB at 14 bit
Dimension / Weight		110 ㎜ × 110 ㎜ × 89 ㎜, 1.45 ㎏ (with M-72 mount)
Cooling Performance		15±2℃ below ambient temperature – Standard cooling with a fan
Temperature		Operating: 0℃ ~ 40℃, Storage: -40℃ ~ 70℃
Trigger Synchronization		Free-Run, Hardware Trigger, Software Trigger, UserOutput0, CXP, Timer
External Trigger		3.3 V ~ 24.0 V, 10 ㎃, Logical Level Input, Optically Isolated
Software Trigger		Asynchronous, Programmable via Camera API
Lens Mount		M72-mount, Custom mount available upon request
Power	External	11 ~ 24 V DC
	Dissipation	Typ. 36 W
Compliance		CE, FCC, KC
API SDK		Vieworks Imaging Solution 7.X

VP-127MX2-M/C21H

Ultra High Resolution CMOS Digital Camera

Relative Sensitivity Curves

* The sensitivity data may not match the measurement on the finished product necessarily because it is measured based on the wafer.

IMX661 Monochrome

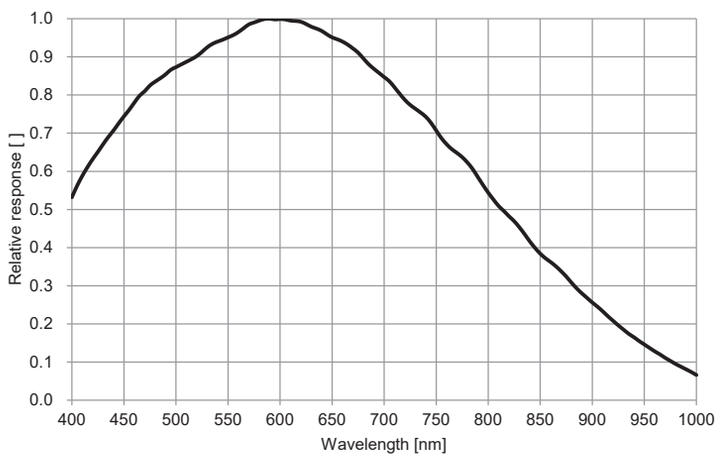

IMX661 Color

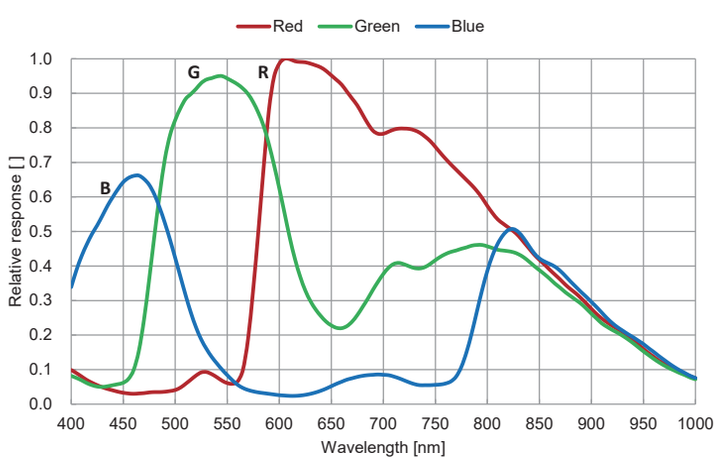

Ordering Scheme

VP - 127M X2 - M 21 H

- Series: VP Series
- Sensor Resolution: 127 Megapixels
- Interface: X2 - CoaXPress 2.0
- Mono / Color: M - Monochrome; C - Color
- Frame Rate: 21 - 21.9 fps
- Sensor Options: H - Sony CMOS (IMX)

Connector Specification

Power

1, 2, 3: +12V DC
4, 5, 6: GND
(HR10A-7R-6PB)

Control

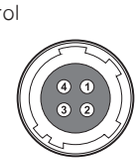

1: Trigger IN+
2: Trigger IN-
3: Strobe Out-(GND)
4: Strobe Out+
(HR10A-7R-4S)

Data Transfer / Communications

Micro-BNC

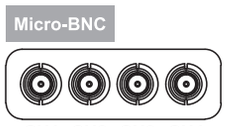

CH1: Master Connection
75 Ω, Micro-BNC (HD-BNC)

Connectors on camera body