B2S
BETTER SOLUTION & SUPPORT

VC-12MX2-M/C 330 F

The Fastest Speed & High Resolution CMOS Digital Camera with CoaXPress 2.0 Interface

The VC-12MX2-M/C 330 F camera is Vieworks' first camera with the CoaXPress 2.0 interface that offers 335 frames per second at 4096 × 3072 resolution. Equipped with the Vieworks' innovative technologies proved by world's top FPD manufacturers, this camera offers not only fast frame rates but also highly uniformed images. Its CoaXPress 2.0 interface supports transmitting image data at up to 50 Gbps using four coaxial cables. Featured with high speed and high performance, the VC-12MX2-M/C 330 F camera is an excellent choice for applications that require high data rates and resolutions, such as FPD, PCB and semiconductor inspections.

VC-12MX2-M/C 330 F

The Fastest Speed & High Resolution CMOS Digital Camera with CoaXPress 2.0 Interface

B2S BETTER SOLUTION & SUPPORT

CXP-12

Main Features

- High Speed 12 Megapixel CMOS Image Sensor
- CoaXPress 2.0 Interface up to 335 fps at 50 Gbps using 4 CH
- Global Shutter CMOS Technology
- Multi-strobe Control (up to 6-line outputs)
- DSNU and PRNU Correction
- Flat Field Correction
- Defective Pixel Correction
- GenICam Compatible - XML based Control

Applications

- FPD and Electronics Inspection
- Semiconductor Inspection
- Research and Scientific Imaging
- Document / Film Scanning

Specifications

Model		VC-12MX2-M/C 330 F
Resolution (H × V)		4,096 × 3,072
Sensor		AMS CMV12000
Optical Format (Diagonal)		APS-like (28.16 ㎜)
Sensor Type		High Speed CMOS Image Sensor
Pixel Size		5.5 ㎛ × 5.5 ㎛
Interface		CoaXPress 2.0 (CXP-12)
Max. Frame Rate	CXP-12 × 1	94 fps
	CXP-12 × 2	188 fps
	CXP-12 × 4	335 fps
Exposure Time (1 ㎲ step)		1 ㎲ - 60 s
Partial Scan (Max. Speed)		28571 fps at 4 Lines
Pixel Data Format	Mono	Mono 8
	Color	GB Bayer 8
Electronic Shutter		Global Shutter
Gain Control		1× ~ 32×
Black Level Control		0 - 15.75 LSB (Increment: 0.25)
Trigger Synchronization		Free-Run, Hardware Trigger, Software Trigger or CXP
External Trigger		3.3 V ~ 24.0 V, 10 ㎃, Logical Level Input, Optically Isolated
Software Trigger		Asynchronous, Programmable via Camera API
Dynamic Range		54 ㏈
Dimension / Weight		80 ㎜ × 80 ㎜ × 102 ㎜, 680 g (F-mount)
Temperature		Operating: 0℃ ~ 40℃, Storage: -40℃ ~ 70℃
Lens Mount		F-mount, Custom mount available upon request
Power	External	10 ~ 24 V DC
	Dissipation	Typ. 21.5 W
	PoCXP	24 V DC, Minimum of two PoCXP cables required
Compliance		CE, FCC, KC
API SDK		Vieworks Imaging Solution 7.X

Spectral Response

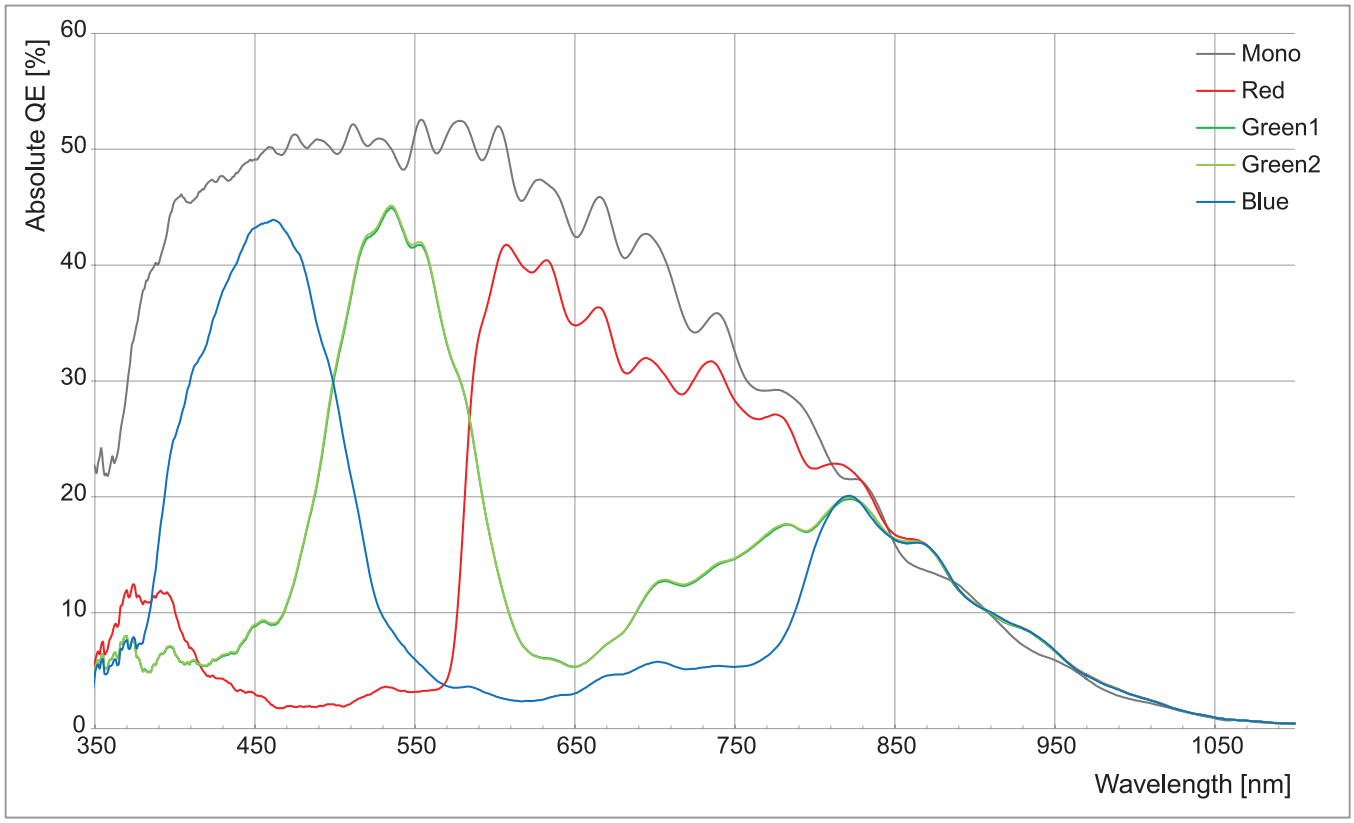

Ordering Scheme

VC-12M X2-M 330 F

- Series: VC Series
- Sensor Resolution: 12M – 12 Megapixels
- Interface: X2 – CoaXPress 2.0
- Mono / Color: M – Monochrome; C – Color
- Frame Rate: 330 – 335 fps
- Sensor Options: F – AMS (CMV)

Connector Specification

Power / Control

1:	DC Ground	2:	+12V DC
3:	I/O Output-	4:	I/O Output1+
5:	Trigger IN-	6:	Trigger IN+
7:	I/O Output2+	8:	I/O Output3+
9:	I/O Output4+	10:	I/O Output5+
11:	I/O Output6+	12:	Not Connected

(HR10A-10R-12PB)

Data Transfer / Communications

Micro-BNC

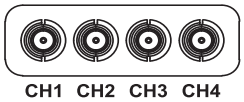

CH1: Master Connection
Micro-BNC (HD-BNC)

Connectors on camera body

Mechanical Dimensions

Unit: mm

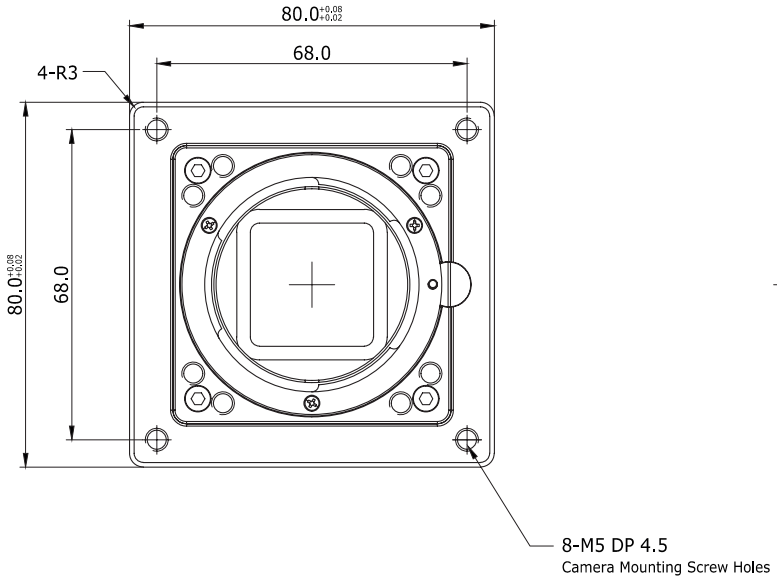

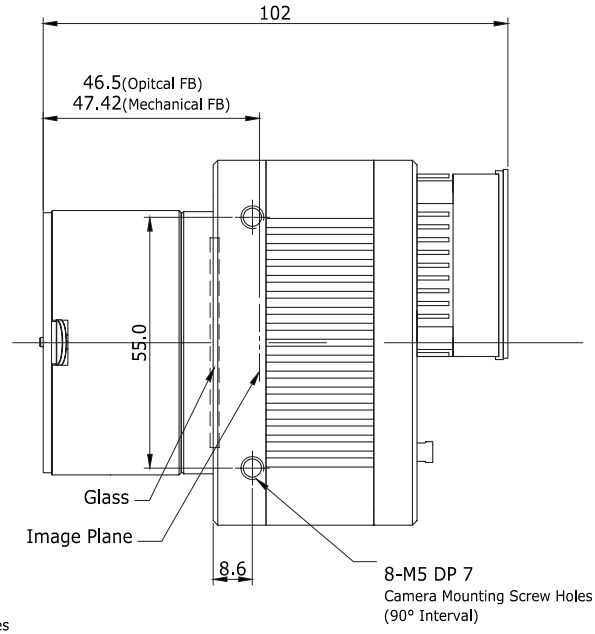

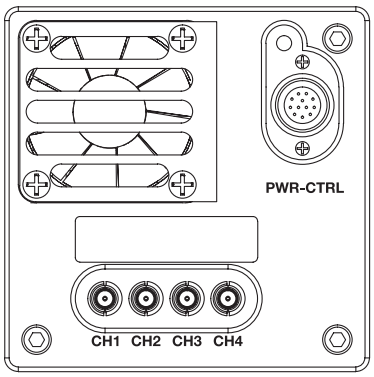

최적의 ALL-IN-1 솔루션을 제안합니다.

솔루션, 제품, 서비스에 대해 궁금하신 내용을 남겨주시면 빠른 시일 내로 회신 드리겠습니다.

공식 홈페이지
공식 블로그
공식 인스타그램

제품·기술지원 문의
02-6914-6363
b2s@b2s.kr