# VC-65MX-M/C 35 I
# VC-65MX-M/C 31 I

## 65 Megapixel High Speed CMOS Digital Camera

The VC-65MX-31 I and VC-65MX-35 I, the latest models of the industrial proven VC series, are new 65 megapixel CoaXPress cameras and based on the latest CMOS image sensor technology (GMAX3265) from Gpixel. The VC-65MX-31 I offers up to 31.6 frames per second at 9344 × 7000 resolution. For high speed applications, the VC-65MX-35 I offers up to 35.5 frames per second at 9344 × 7000 resolution.
Equipped with the Vieworks' innovative technologies proved by world's top FPD manufacturers, the VC-65MX cameras offer not only highly uniformed images but also high speed image processing capabilities. Featured with high quality image uniformity and high resolution, these cameras are ideal for demanding applications such as FPD, PCB and semiconductor inspections.

# VC-65MX-M/C 35 I / VC-65MX-M/C 31 I

65 Megapixel High Speed CMOS Digital Camera

## Main Features

- 65 Megapixel Resolution
- CoaXPress Interface up to 35.5 fps at 25 Gbps using 4 CH
- Global Shutter CMOS Technology
- DSNU and PRNU Correction
- Flat Field Correction
- Defective Pixel Correction
- Hot Pixel Correction
- GenICam Compatible – XML based Control

## Applications

- Flat Panel Display Inspection
- Electronics Inspection
- Semiconductor Inspection
- Document / Film Scanning

## Specifications

| Model | | VC-65MX-M/C 31 I | VC-65MX-M/C 35 I |
|---|---|---|---|
| Resolution (H × V) | | 9344 × 7000 | |
| Sensor | | Gpixel GMAX3265 – Normal Speed | Gpixel GMAX3265 – High Speed |
| Sensor Size (Diagonal) | | 29.9 ㎜ × 22.4 ㎜ (37.4 ㎜) | |
| Pixel Size | | 3.2 ㎛ × 3.2 ㎛ | |
| Interface | | CoaXPress | |
| Max. Frame Rate | | 4 CH: 31.6 fps @ 8 bit | 4 CH: 35.5 fps @ 8 bit |
| | | 4 CH: 27.3 fps @ 10 bit | 4 CH: 27.5 fps @ 10 bit |
| | | 4 CH: 24.1 fps @ 12 bit | N/A @ 12 bit |
| | | 4 CH: 31.6 fps @ 8 bit (2×2 Binning) | 4 CH: 71.1 fps @ 8 bit (2×2 Binning) |
| Exposure Time (1 ㎲ step) | | 14 ㎲ – 60 s | 12 ㎲ – 60 s |
| Partial Scan (Max. Speed) | | 6349.2 fps at 4 Lines | 7142.8 fps at 4 Lines |
| Binning | | 2 × 2 Binning | |
| Pixel Data Format | Mono | Mono 8 / Mono 10 / Mono 12 | Mono 8 / Mono 10 |
| | Color | GB Bayer 8 / GB Bayer 10 / GB Bayer 12 | GB Bayer 8 / GB Bayer 10 |
| Electronic Shutter | | Global Shutter | |
| Trigger Synchronization | | Free-Run, Hardware Trigger, Software Trigger or CXP | |
| External Trigger | | 3.3 V ~ 24.0 V, 10 ㎃, Logical Level Input, Optically Isolated | |
| Software Trigger | | Asynchronous, Programmable via Camera API | |
| Dynamic Range | | 66 ㏈ @ 12 bit | 62 ㏈ @ 10 bit |
| Gain Control | | 1× ~ 32× | |
| Black Level Control | | 0 ~ 255 LSB at 12 bit | 0 ~ 63 LSB at 10 bit |
| Dimension / Weight | | 80 ㎜ × 80 ㎜ × 103 ㎜, 750 g (with F-mount) | |
| Temperature | | Operating: 0℃ ~ 40℃, Storage: -40℃ ~ 70℃ | |
| Lens Mount | | F-mount, Custom mount available upon request | |
| Power | External | 11 ~ 24 V DC | |
| | Dissipation | Typ. 13.5 W | Typ. 17.5 W |
| | PoCXP | 24 V DC, Minimum of two PoCXP cables required | |
| Compliance | | CE, FCC, KC | |
| API SDK | | Vieworks Imaging Solution 7.X | |

## Spectral Response

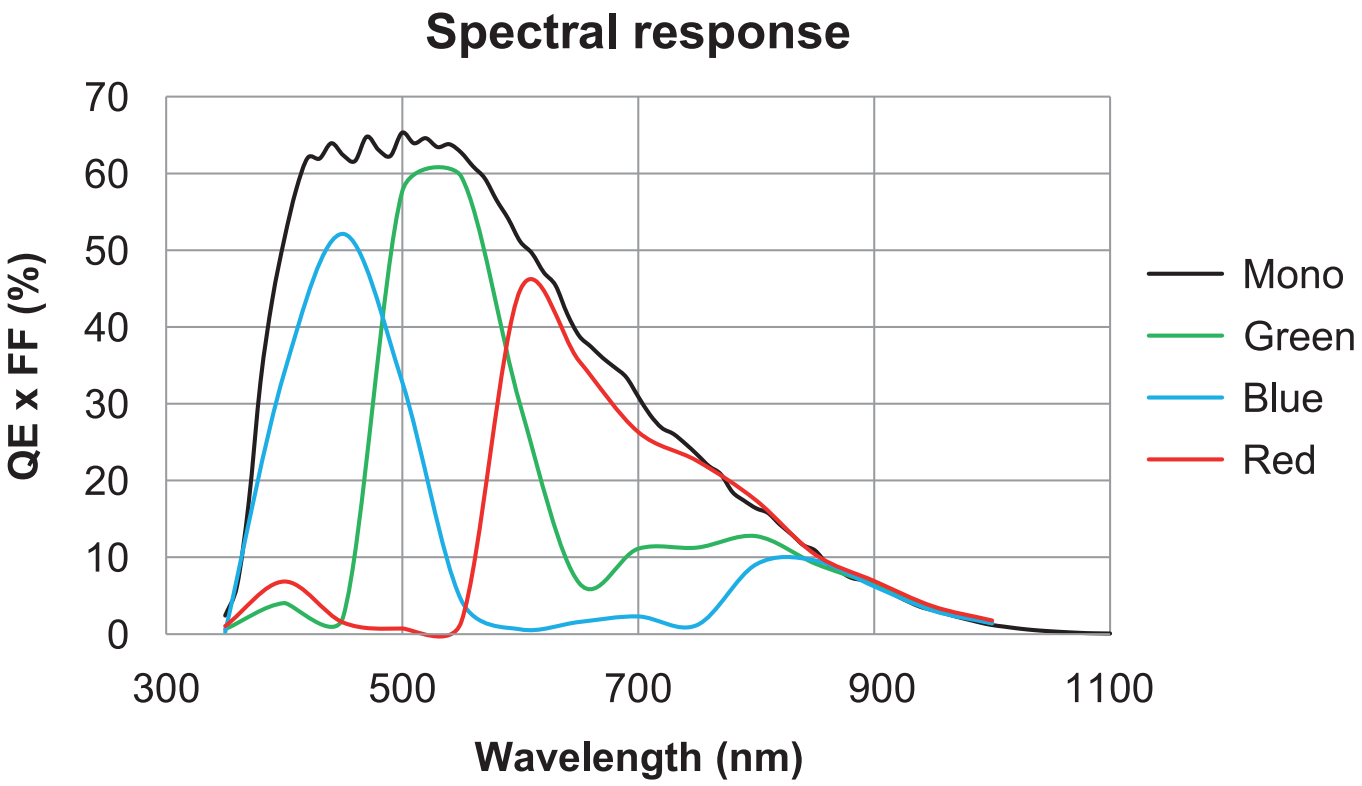


## Ordering Scheme

VC - 65M X - M 35 I

Series
VC Series

Sensor Resolution
65M – 65 Megapixels

Interface
X – CoaXPress

Mono / Color
M – Monochrome
C – Color

Frame Rate
35 – 35.5 fps
31 – 31.6 fps

Sensor Options
I – Gpixel CMOS

## Connector Specification

Power

1, 2, 3: +12V DC
4, 5, 6: GND
(HR10A-7R-6PB)

Control

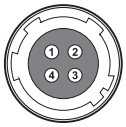


1: Trigger IN+
2: Trigger IN–
3: Strobe Out–(GND)
4: Strobe Out+
(HR10A-7R-4S)

Data Transfer / Communications

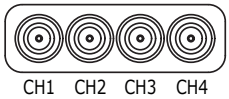


CH1: Master Connection
75 Ω, DIN 1.0/2.3

Connectors on camera body

## Mechanical Dimensions

Unit: mm

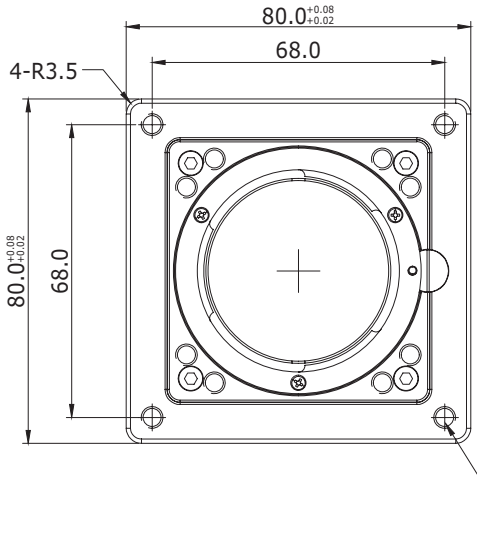


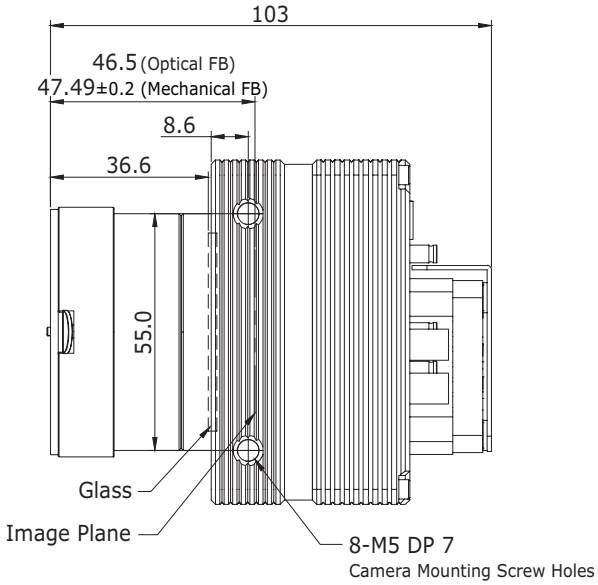


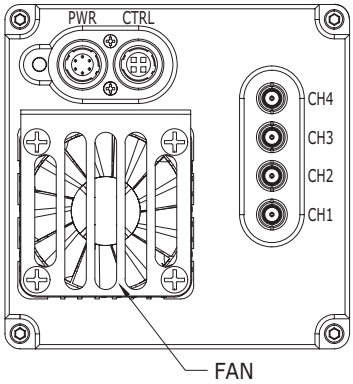


## 최적의 ALL-IN-1 솔루션을 제안합니다.

솔루션, 제품, 서비스에 대해 궁금하신 내용을 남겨주시면 빠른 시일 내로 회신 드리겠습니다.

공식 홈페이지
공식 블로그
공식 인스타그램

제품·기술지원 문의
02-6914-6363
b2s@b2s.kr