VC-25MX-M 42 I

25 Megapixel Two-Channel CoaXPress Camera

The VC-25MX-42 I, the latest model of the industrial proven VC series, is a new 25 megapixel resolution CMOS camera with a two-channel CoaXPress interface. The VC-25MX-42 I uses the latest CMOS global shutter image sensor (GMAX0505) technology from Gpixel and offers up to 41.7 frames per second at 5120 × 5120 resolution. These combinations of high resolution, high speed and global shutter set a new standard for industrial, scientific and surveillance digital imaging applications. Customers in the industrial market can take advantage of common coax cabling to transmit image data at up to 12.5 Gigabits per second. Featuring high speed and high resolution in a compact form factor, the VC-25MX-42 I is ideal for wide range of demanding applications such as FPD, PCB and semiconductor inspections.

Unit: ㎜

Mechanical Dimensions

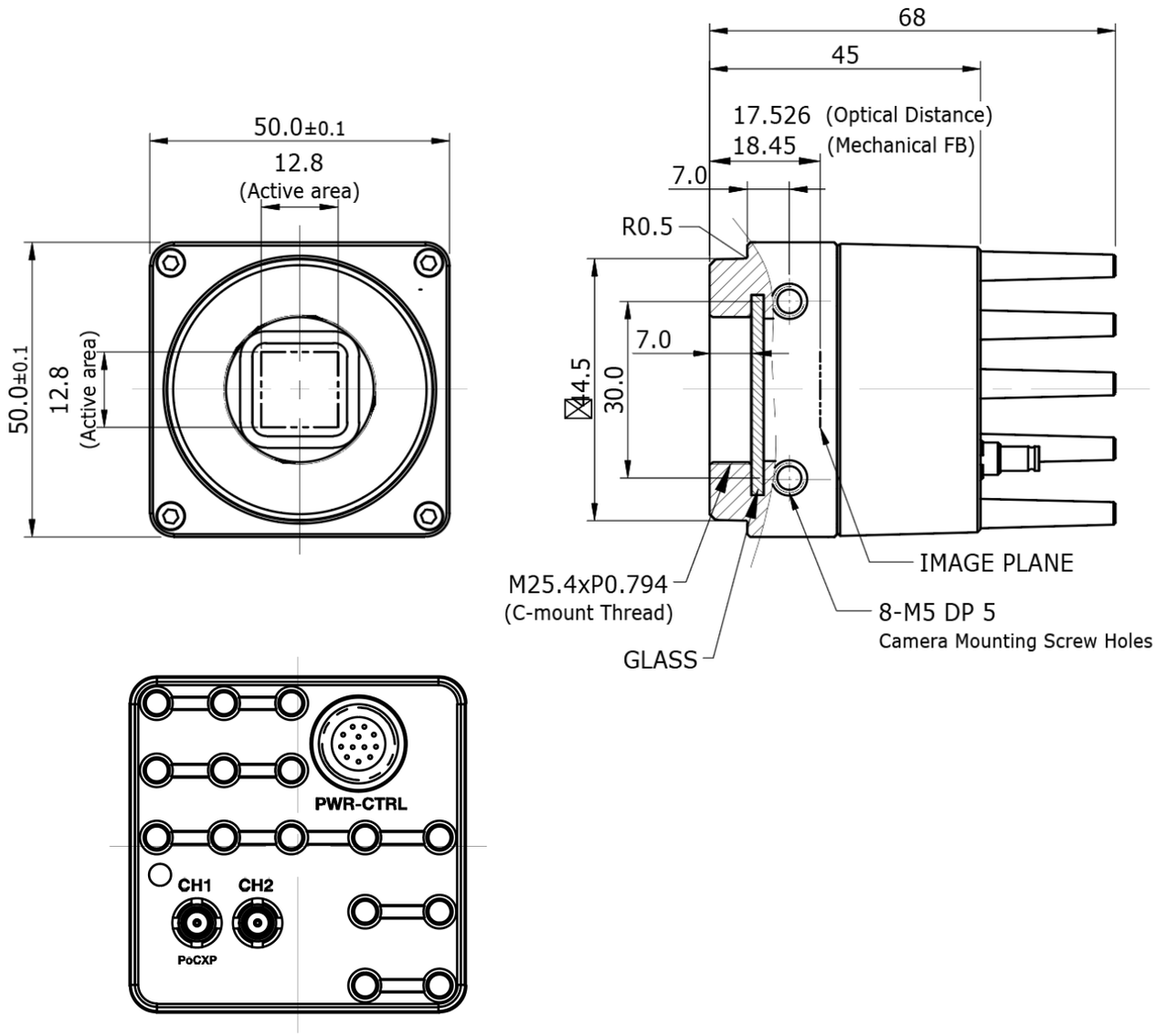

최적의 ALL-IN-1 솔루션을 제안합니다.

솔루션, 제품, 서비스에 대해 궁금하신 내용을 남겨주시면 빠른 시일 내로 회신 드리겠습니다.

공식 홈페이지 공식 블로그 공식 인스타그램

제품·기술지원 문의
02-6914-6363
b2s@b2s.kr

VC-25MX-M 42 I

25 Megapixel Two-Channel CoaXPress Camera

Main Features

- 25 Megapixel Resolution
- CoaXPress Interface up to 41.7 fps at 25 Gbps using 2 CH
- Global Shutter CMOS Technology
- DSNU and PRNU Correction
- Flat Field Correction
- Dynamic Defective Pixel Correction
- GenICam Compatible – XML based Control

Applications

- Flat Panel Display Inspection
- Electronics Inspection
- Semiconductor Inspection
- Document / Film Scanning

Specifications

Model		VC-25MX-M 42 I
Resolution (H × V)		5120 × 5120
Sensor		Gpixel GMAX0505
Sensor Size (Diagonal)		12.8 ㎜ × 12.8 ㎜ (18.1 ㎜)
Pixel Size		2.5 ㎛ × 2.5 ㎛
Interface		CoaXPress
Max. Frame Rate		1 CH: 23.1 fps
		2 CH: 41.7 fps
Exposure Time (1 ㎲ step)		1 ㎲ – 60 s
Partial Scan (Max. Speed)		6144.4 fps at 64 × 2
Pixel Data Format		Mono 8 / Mono 10
Electronic Shutter		Global Shutter
Trigger Synchronization		Free-Run, Hardware Trigger, Software Trigger or CXP
External Trigger		3.3 V ~ 24.0 V, 10 ㎃, Logical Level Input, Optically Isolated
Software Trigger		Asynchronous, Programmable via Camera API
Dynamic Range		60 ㏈
Gain Control		1× ~ 32×
Black Level Control		0 ~ 63 LSB at 10 bit
Dimension / Weight		50 ㎜ × 50 ㎜ × 68 ㎜, 220 g (with C mount)
Temperature		Operating: 0℃ ~ 40℃, Storage: -40℃ ~ 70℃
Lens Mount		C-mount, Custom mount available upon request
Power	External	11 ~ 24 V DC
	Dissipation	Typ. 8.0 W
	PoCXP	24 V DC, CH 1 only
Compliance		CE, FCC, KC
API SDK		Vieworks Imaging Solution 7.X

Spectral Response

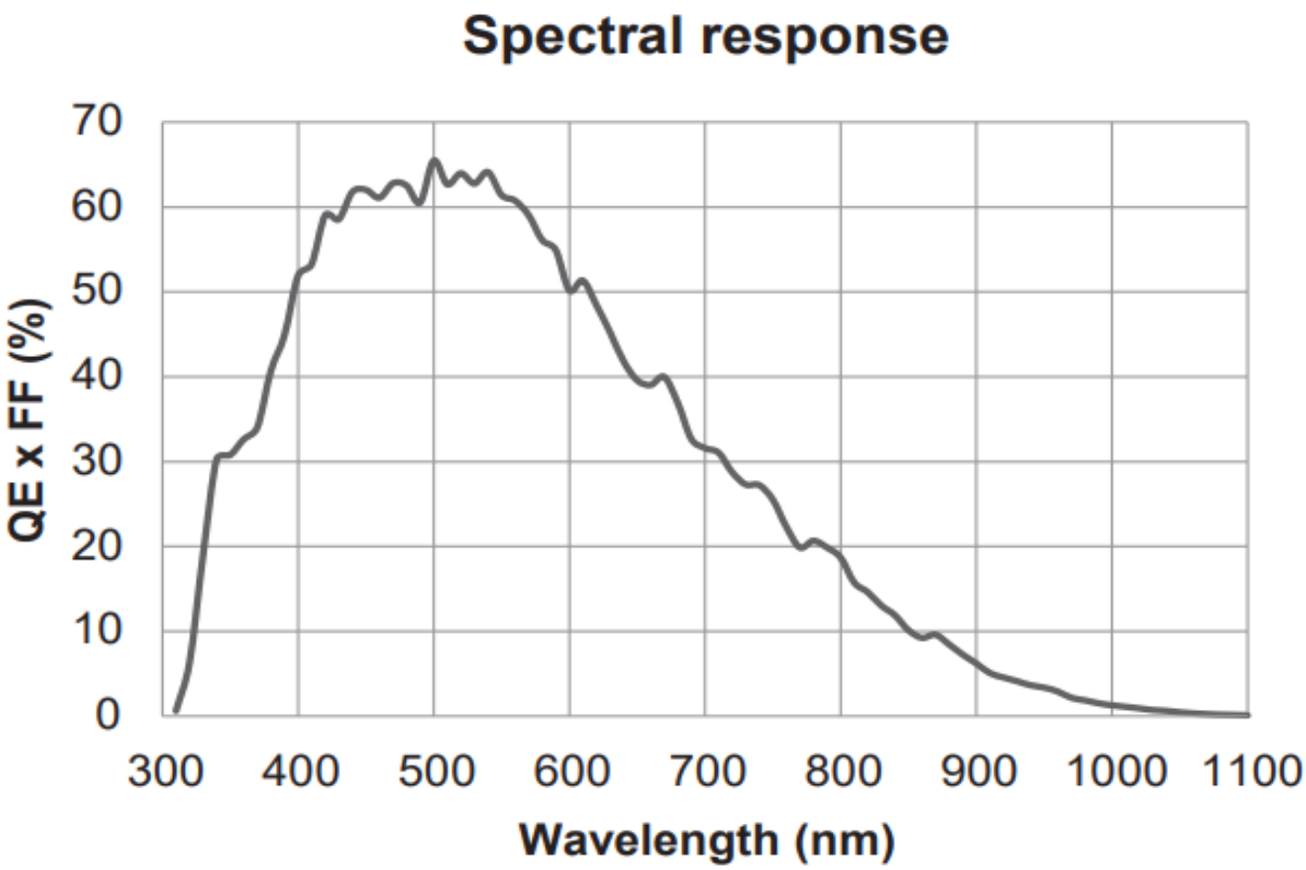

Ordering Scheme

VC - 25M X - M 42 I

- Series: VC Series
- Sensor Resolution: 25M - 25 Megapixels
- Interface: X - CoaXPress
- Mono / Color: M - Monochrome
- Frame Rate: 42 - 41.7 fps
- Sensor Options: I - Gpixel CMOS

Connector Specification

Power / Control

1: DC Ground
2: +12 V DC
3: I/O Output-
4: I/O Output+
5: Trigger IN-
6: Trigger IN+
7~12: Not Connected
(HR10A-10R-12PB)

Data Transfer / Communications

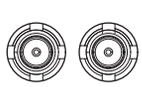

CH1: Master Connection
(75 Ω, DIN 1.0/2.3)

Connectors on camera body